BV 170 MODEL 2013

UNIT 1

ILLUSTRATED PARTS BREAKDOWN

From Serial Number: 09233000649

Edizione 2013
Rev. A

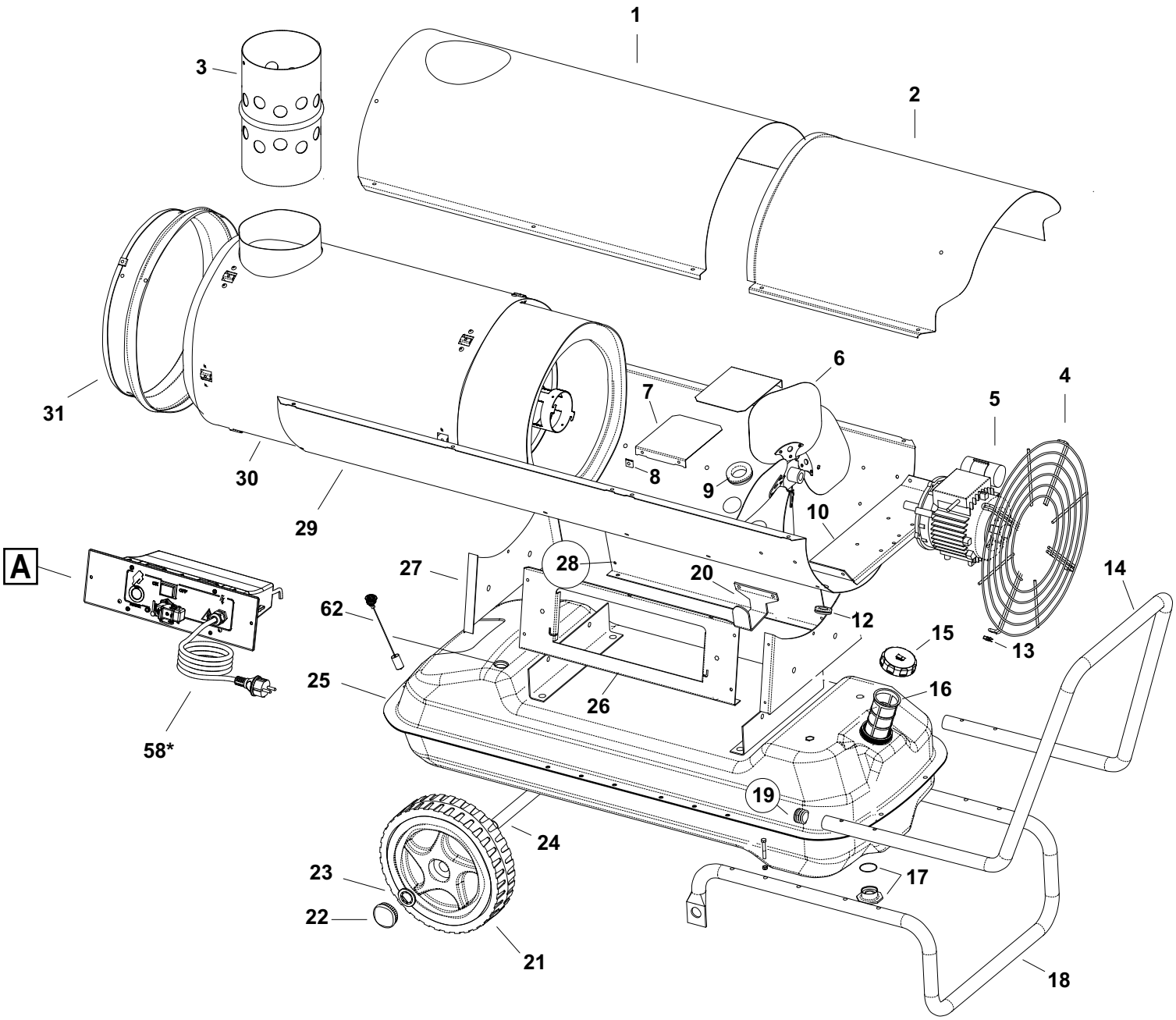
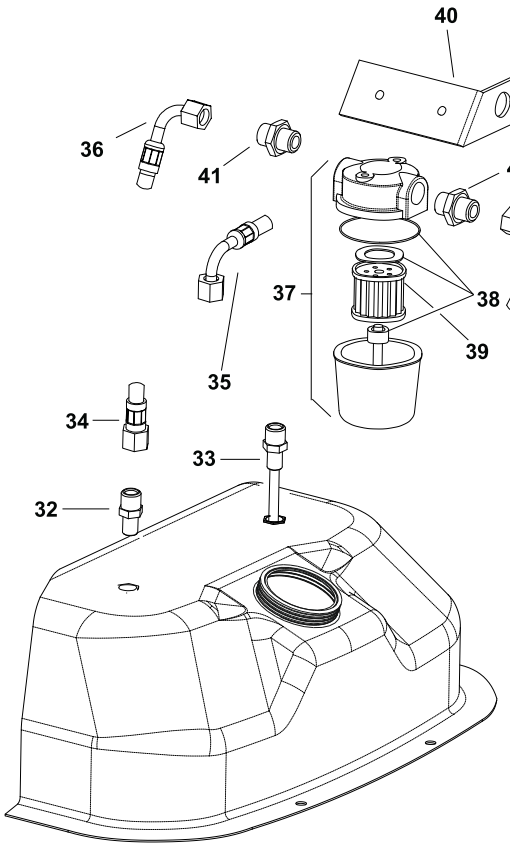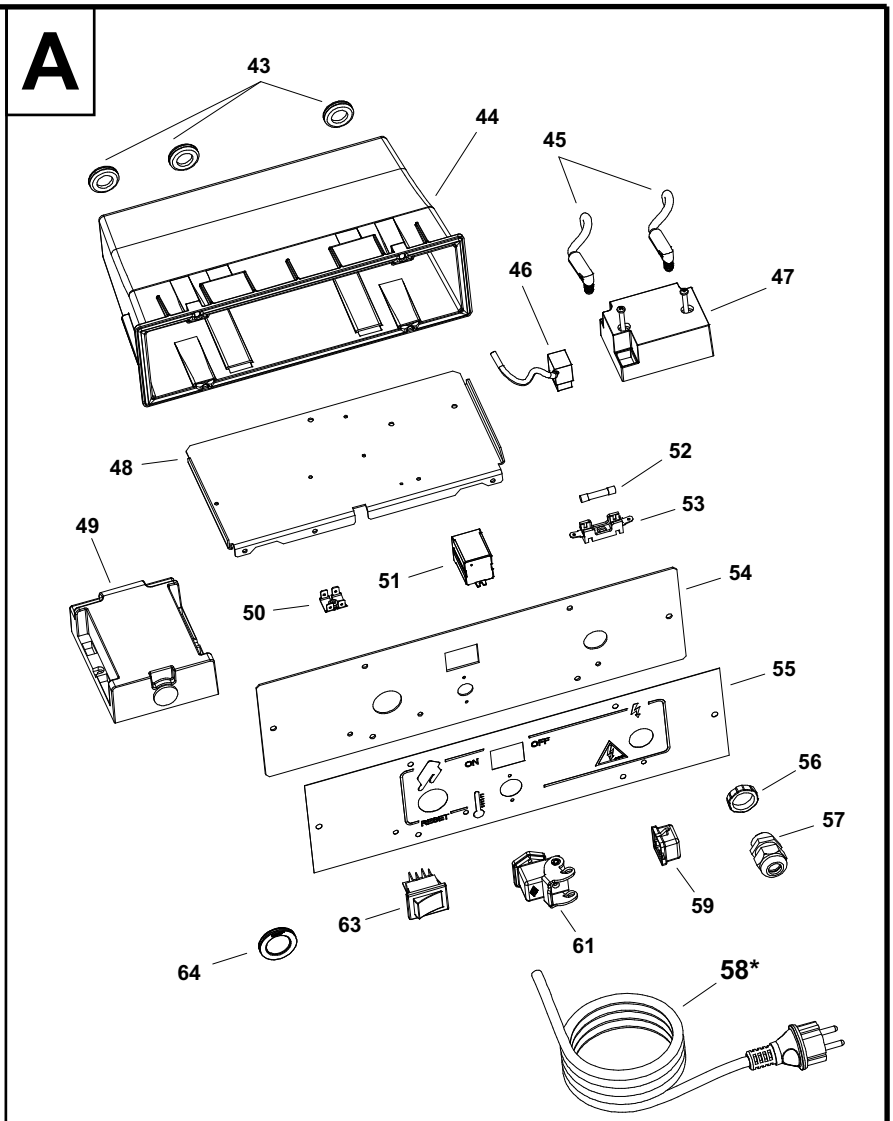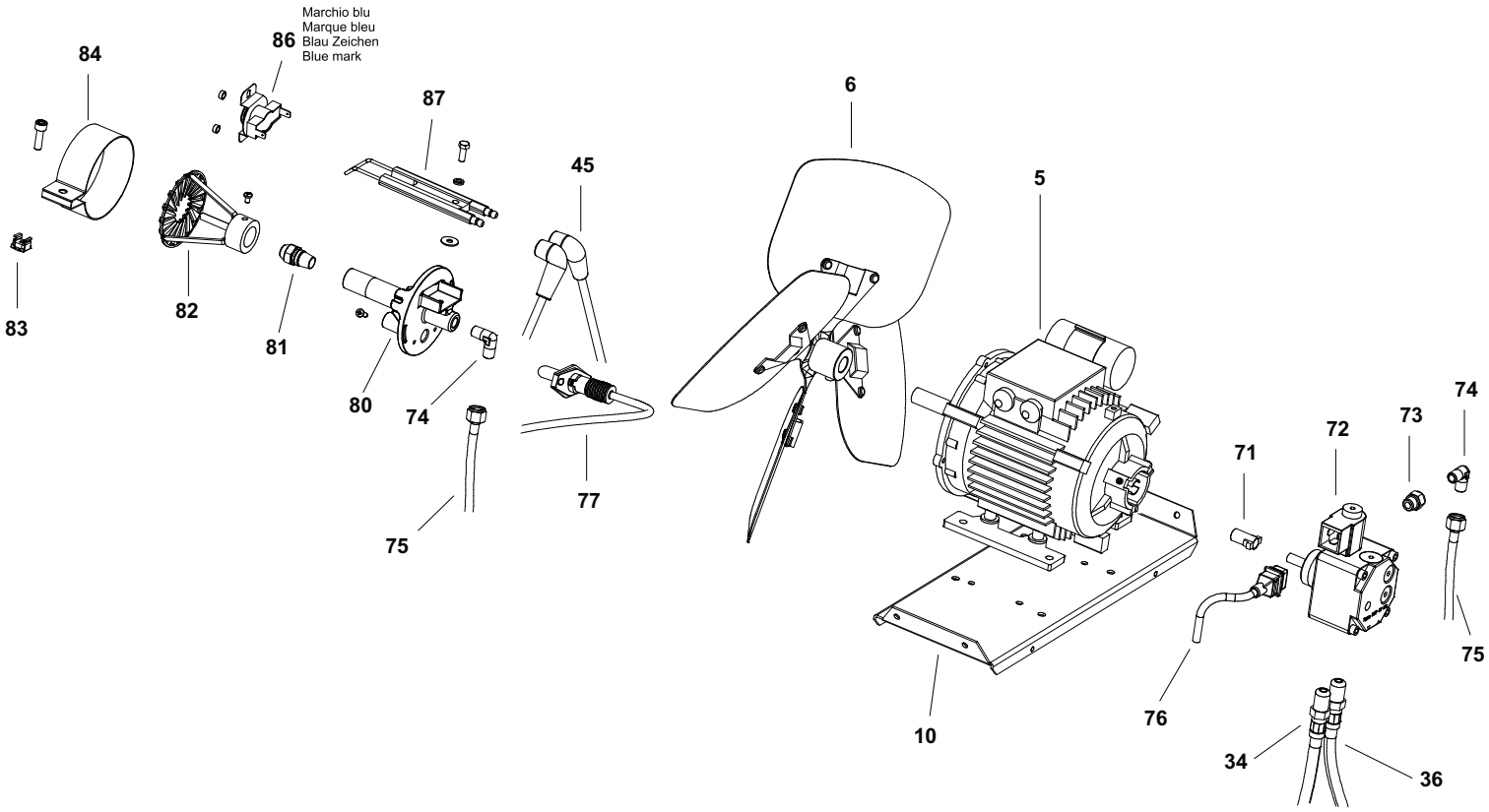
BV 170 MODEL 2013